Basic dimensions L/D	Unmarked tolerance TOL
0.5-6	±0.1
>6-30	±0.2
>30-120	±0.3
>120-400	±0.5
>400-1000	±0.8
>1000-2000	±1.2
>2000-4000	±2
Round/ Chamfering R/C	Unmarked tolerance TOL
0.5-3	±0.2
>3-6	±0.5
>6	±1.0
Short side length LESS	Unmarked tolerance TOL
>0-10	±1°
>10-50	±0.5°
>50-120	±0.3°
>120-400	±0.15°
>400	±0.1

WARNING: CEG Motor (SUZHOU) Co., LTD., to file and contains data ownership, can only be used in the scope of the company for the purpose; Without prior written authorization, shall not copy or disclose all and part information; And must be returned in time related information and copy to CEG Motor (SUZHOU) Co., LTD.,

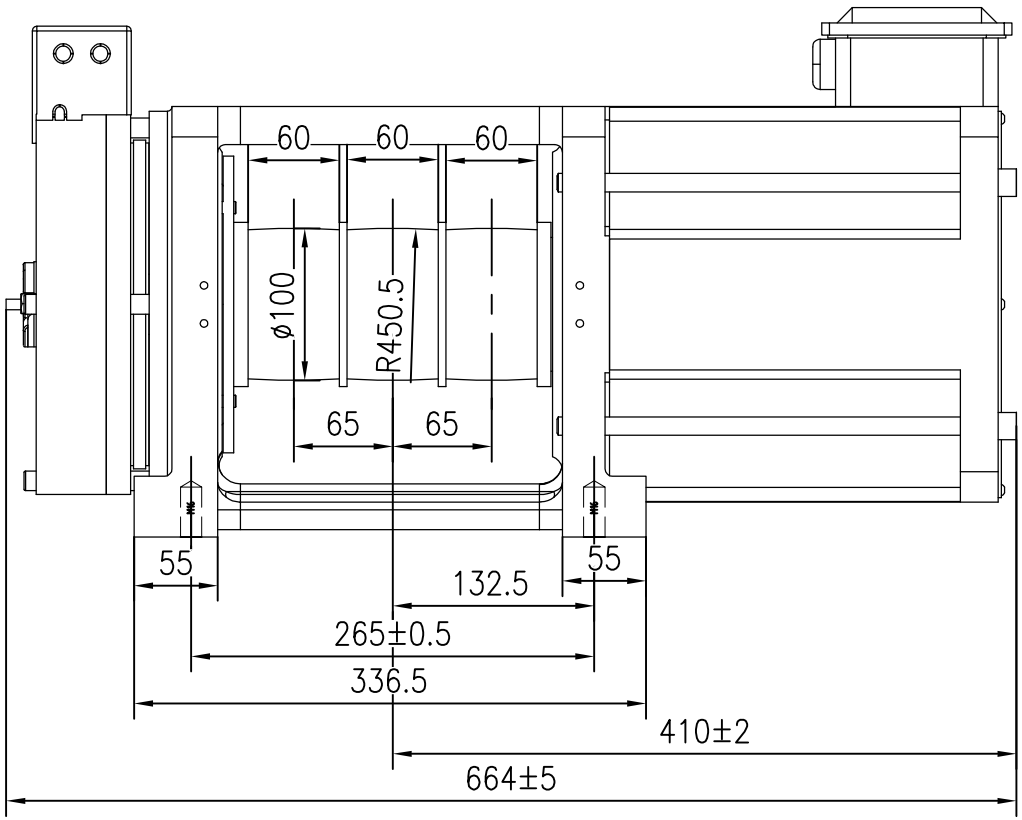

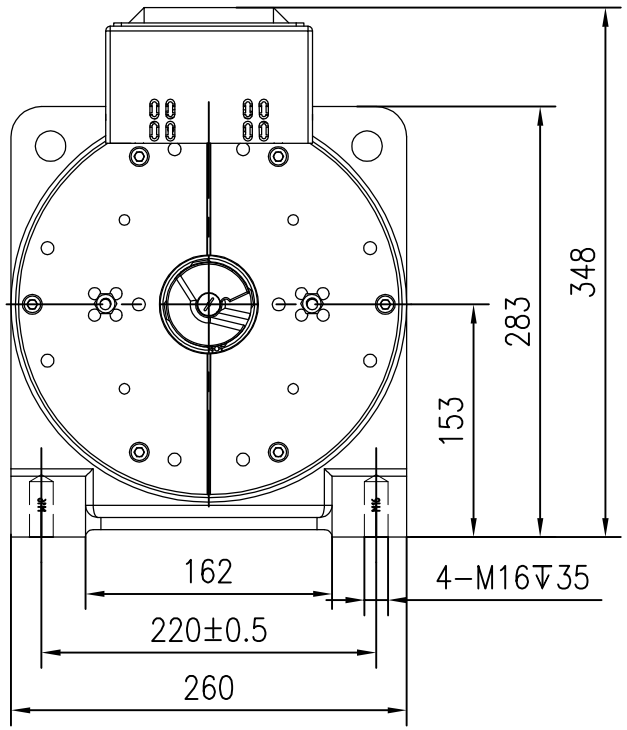

											Part Name		Drawing No
											OUTLINE DRAWING		A210332001
											Model	Material	Scale
											CSAG-GK100A		1: 1
							Signature	Date		Signature	Date	Total pages	Page	Weight
						CHK			TEC			1	1	
A0						DSG			APPD			CEG Motor (SUZHOU) Co., LTD		
Version No.	Mark	NO.	Change the content	Person in charge	Date	First drawing date			2025.4.19					