Basic dimensions L/D	Unmarked tolerance TOL
0.5–6	±0.1
>6–30	±0.2
>30–120	±0.3
>120–400	±0.5
>400–1000	±0.8
>1000–2000	±1.2
>2000–4000	±2
Round/ Chamfering R/C	**Unmarked tolerance TOL**
0.5–3	±0.2
>3–6	±0.5
>6	±1.0
Short side length LESS	**Unmarked tolerance TOL**
>0–10	±1
>10–50	±0.5
>50–120	±0.3
>120–400	±0.15
>400	±0.1

WARNING:
CEG Motor (SUZHOU) Co., LTD., to file and contains data ownership, can only be used in the scope of the company for the purpose; Without prior written authorization, shall not copy or disclose all and part information; And must be returned in time related information and copy to CEG Motor (SUZHOU) Co., LTD.,

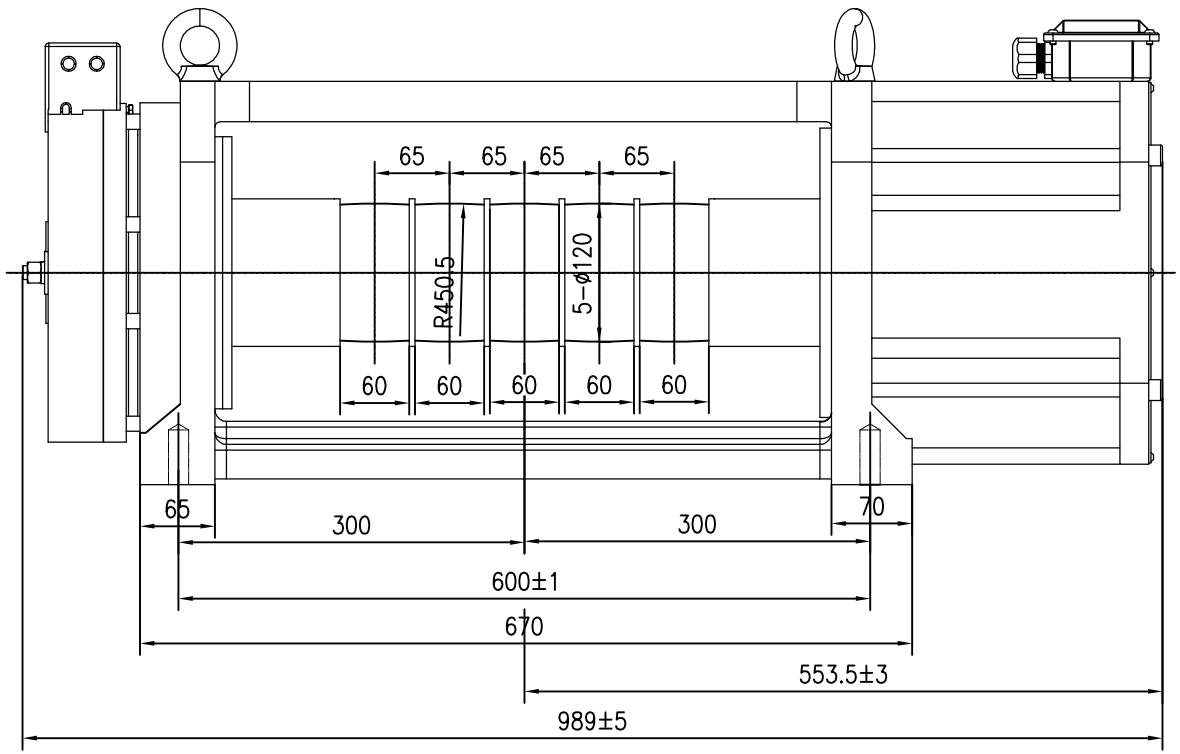

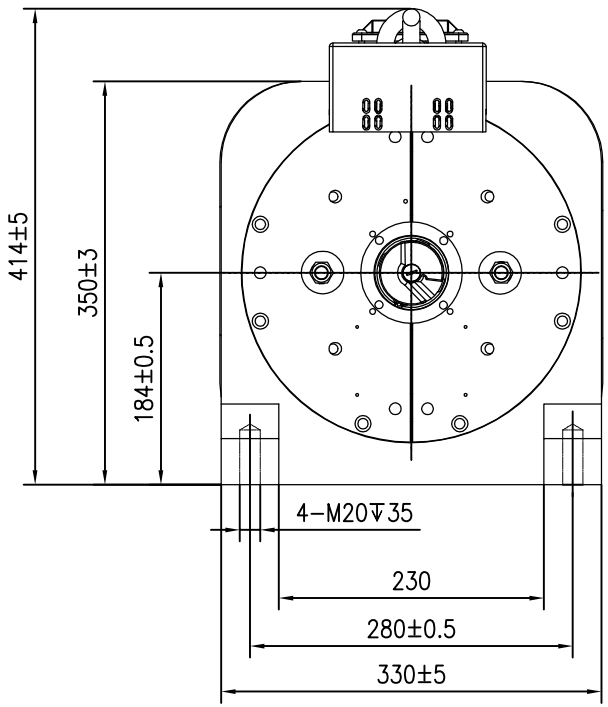

											Part Name		Drawing No
											Outline drawing		A210328010
											Model	Material	Scale
											CSAG-GKS120-1600		1: 1
							Signature	Date		Signature	Date	Total pages	Page	Weight
						CHK			TEC			1	1	
A0						DSG			APPD			CEG Motor (SUZHOU) Co., LTD		
Version No.	Mark	NO.	Change the content	Person in charge	Date	First drawing date			2026.4.7					