Basic dimensions L/D	Unmarked tolerance TOL
0.5–6	±0.1
>6–30	±0.2
>30–120	±0.3
>120–400	±0.5
>400–1000	±0.8
>1000–2000	±1.2
>2000–4000	±2

Round/ Chamfering R/C	Unmarked tolerance TOL
0.5–3	±0.2
>3–6	±0.5
>6	±1.0

Short side length LESS	Unmarked tolerance TOL
>0–10	±1
>10–50	±0.5
>50–120	±0.3
>120–400	±0.15
>400	±0.1

WARNING: CEG Motor (SUZHOU) Co., LTD., to file and contains data ownership, can only be used in the scope of the company for the purpose; Without prior written authorization, shall not copy or disclose all and part information; And must be returned in time related information and copy to CEG Motor (SUZHOU) Co., LTD.,

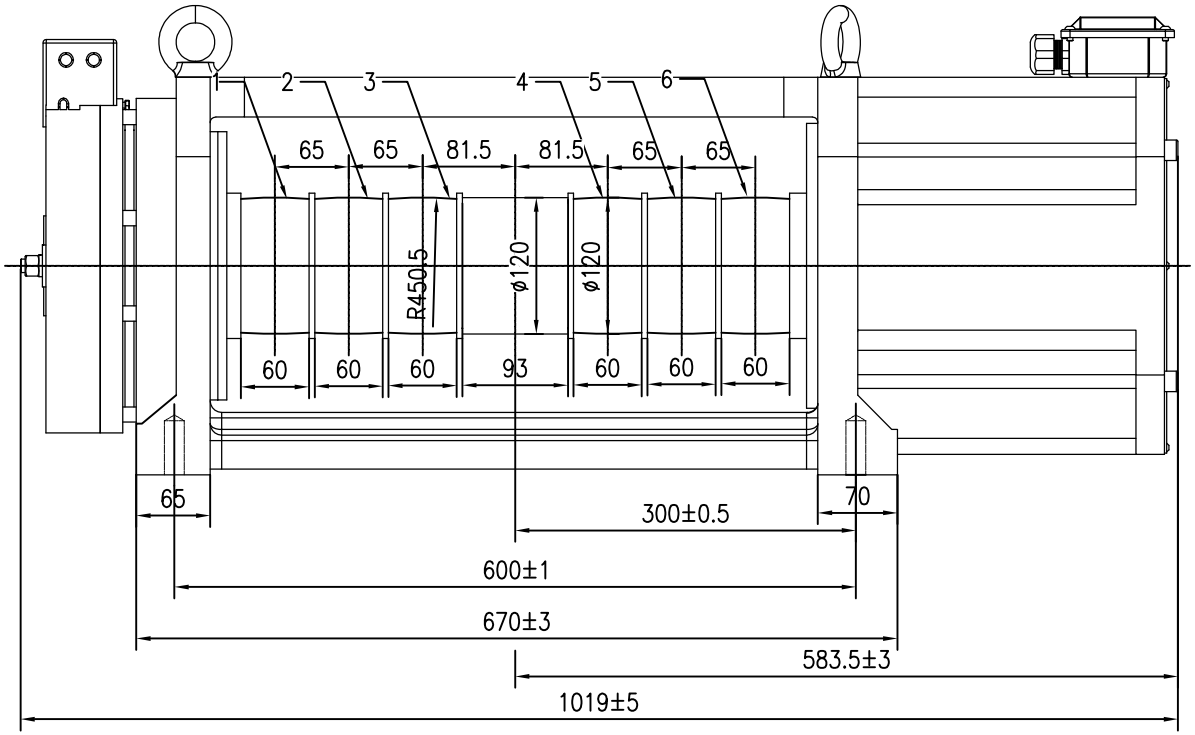

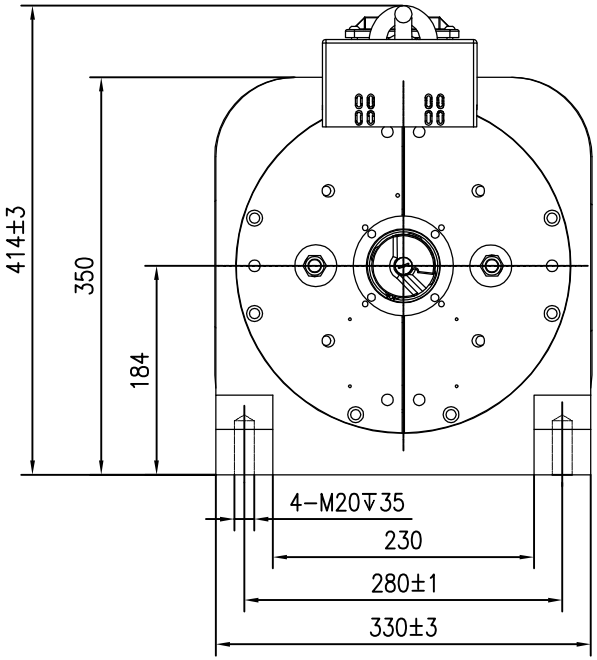

LOAD(kg)	Suspension	Belt Position
CSAG-GKS120-1600kg	2:1	1、2、3、4、5、6

CSAG-GKS120(SUSPENSION 2:1)Permanent Magnet Synchronous Gearless Traction Machine

Spec.	Load	Speed	Height	Toque	Sheave Dia.	Groove pitch	Sheave Groove	Power	Rated Voltage	Rated Current	Rated Frequency	Rated Speed
	kg	m/s	m	Nm	mm	mm	n*mm	kW	V	A	Hz	rpm
CSAG-GKS120-1600-1.0	1600	1	≤50	321	120	65	6*30	10.7	380	24.6	31.8	318
CSAG-GKS120-1600-1.6	1600	1.6	≤80	321	120	65	6*30	17.1	380	41.6	50.9	509
CSAG-GKS120-1600-1.75	1600	1.75	≤80	321	120	65	6*30	18.7	380	41.6	55.7	557

Version No.	Mark	NO.	Change the content	Person in charge	Date
A0					

	Signature	Date		Signature	Date
CHK			TEC		
DSG			APPD		

First drawing date: 2024.9.23

Part Name	Drawing No
Outline drawing	A210328006

Model	Material	Scale
CSAG-GKS120		1: 1

Total pages	Page	Weight
1	1	

CEG Motor (SUZHOU) Co., LTD