Basic dimensions L/D	Unmarked tolerance TOL
0.5-6	±0.1
>6-30	±0.2
>30-120	±0.3
>120-400	±0.5
>400-1000	±0.8
>1000-2000	±1.2
>2000-4000	±2

Round/ Chamfering R/C	Unmarked tolerance TOL
0.5-3	±0.2
>3-6	±0.5
>6	±1.0

Short side length LESS	Unmarked tolerance TOL
>0-10	±1°
>10-50	±0.5°
>50-120	±0.3°
>120-400	±0.15°
>400	±0.1°

WARNING: CEG Motor (SUZHOU) Co., LTD., to file and contains data ownership, can only be used in the scope of the company for the purpose; Without prior written authorization, shall not copy or disclose all and part information; And must be returned in time related information and copy to CEG Motor (SUZHOU) Co., LTD.,

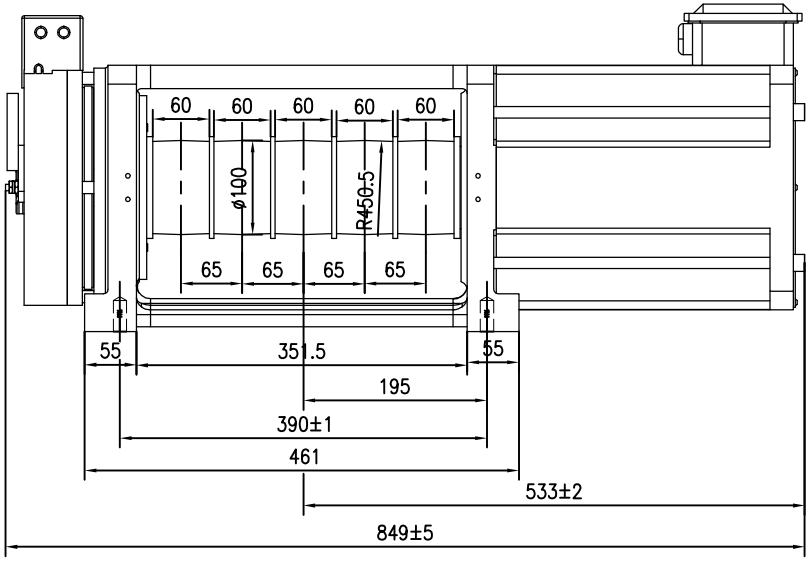

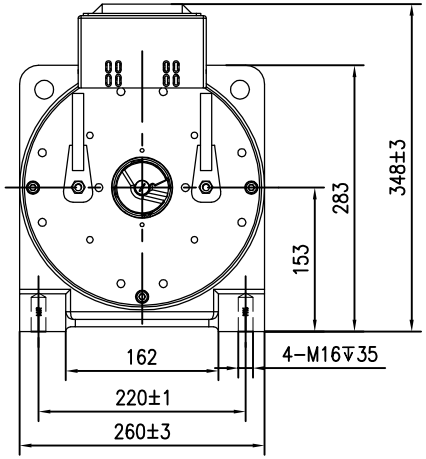

CSAG-GK100(SUSPENSION 2:1)Permanent Magnet Synchronous Gearless Traction Machine

Spec.	Load	Speed	Height	Toque	Sheave Dia.	Groove pitch	Sheave Groove	Power	Rated Voltage	Rated Current	Rated Frequency	Rated Speed
	kg	m/s	m	Nm	mm	mm	n*mm	kW	V	A	Hz	rpm
CSAG-GK100-1250-1.0	1250	1	≤80	208	100	65	5*30	8.4	380	19.2	31.8	382
CSAG-GK100-1250-1.6	1250	1.6	≤80	208	100	65	5*30	13.4	380	29	50.9	611
CSAG-GK100-1250-1.75	1250	1.75	≤80	208	100	65	5*30	14.6	380	29	55.7	668

Version No.	Mark	NO.	Change the content	Person in charge	Date
A0					

	Signature	Date		Signature	Date
CHK			TEC		
DSG			APPD		

First drawing date 2026.1.19

Part Name		Drawing No
OUTLINE DRAWING		A210327018
Model	Material	Scale
CSAG-GK100		1: 1
Total pages	Page	Weight
1	1	

CEG Motor (SUZHOU) Co., LTD