Basic dimensions L/D	Unmarked tolerance TOL
0.5-6	±0.1
>6-30	±0.2
>30-120	±0.3
>120-400	±0.5
>400-1000	±0.8
>1000-2000	±1.2
>2000-4000	±2
Round/ Chamfering R/C	**Unmarked tolerance TOL**
0.5-3	±0.2
>3-6	±0.5
>6	±1.0
Short side length LESS	**Unmarked tolerance TOL**
>0-10	±1°
>10-50	±0.5°
>50-120	±0.3°
>120-400	±0.15°
>400	±0.1°

WARNING: CEG Motor (SUZHOU) Co., LTD., to file and contains data ownership, can only be used in the scope of the company for the purpose; Without prior written authorization, shall not copy or disclose all and part information; And must be returned in time related information and copy to CEG Motor (SUZHOU) Co., LTD.,

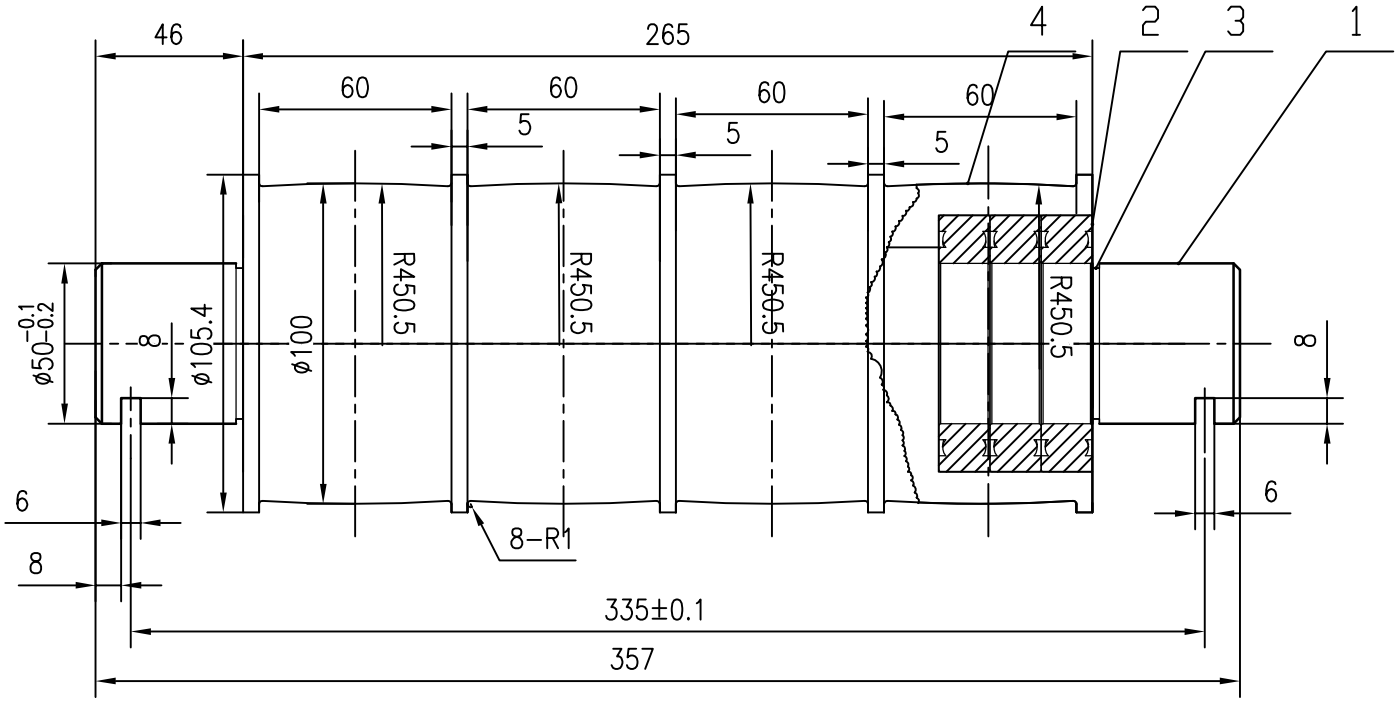

Technical requirements:

1. Tempering treatment: 22 ~ 30HRC;
2. All unindicated dimensional tolerances shall be executed in accordance with GB/T 1804-m class.
3. Moisture-proof treatment at both ends;
4. Hard chrome coating on the sheave surface .

Serial number	Generation of no.	Name	Quantity	Materials			Reserve note
4	A328427001	Deflection Sheave	1	40Cr			
3	GB/T894.1/50	Elastic retainer for shaft	2				
2	GB/T276/6010	Deep groove ball bearing	6				
1	A328327001	Deflection Sheave shaft	1	40Cr			

Version No.	Mark	NO.	Change the content	Person in charge	Date
A0					

	Signature	Date		Signature	Date
CHK			TEC		
DSG			APPD		

First drawing date 2025.1.8

Part Name		Drawing No
Deflection Sheave		A140127001
Model	Material	Scale
CSAG-GK100		1: 1
Total pages	Page	Weight
1	1	

CEG Motor (SUZHOU) Co., LTD